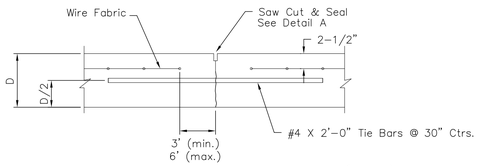

LONGITUDINAL JOINT DETAIL (L.J.)

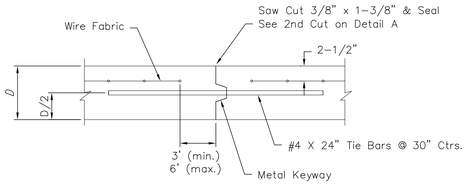

OPT. LONGITUDINAL JOINT DETAIL (L.J.)

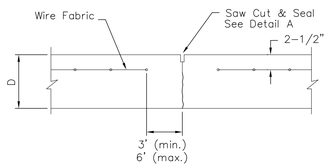

CONTRACTION JOINT DETAIL (C.J.)

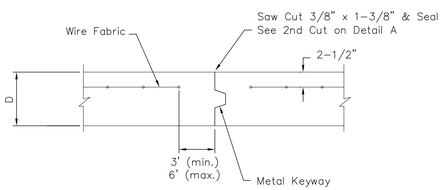

OPTIONAL CONTRACTION JOINT

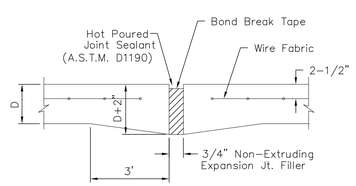

EXPANSION (ISOLATION) JOINT

NOTE: Extra Thickness to be Subsidiary to
Price of Square Yards Pavement

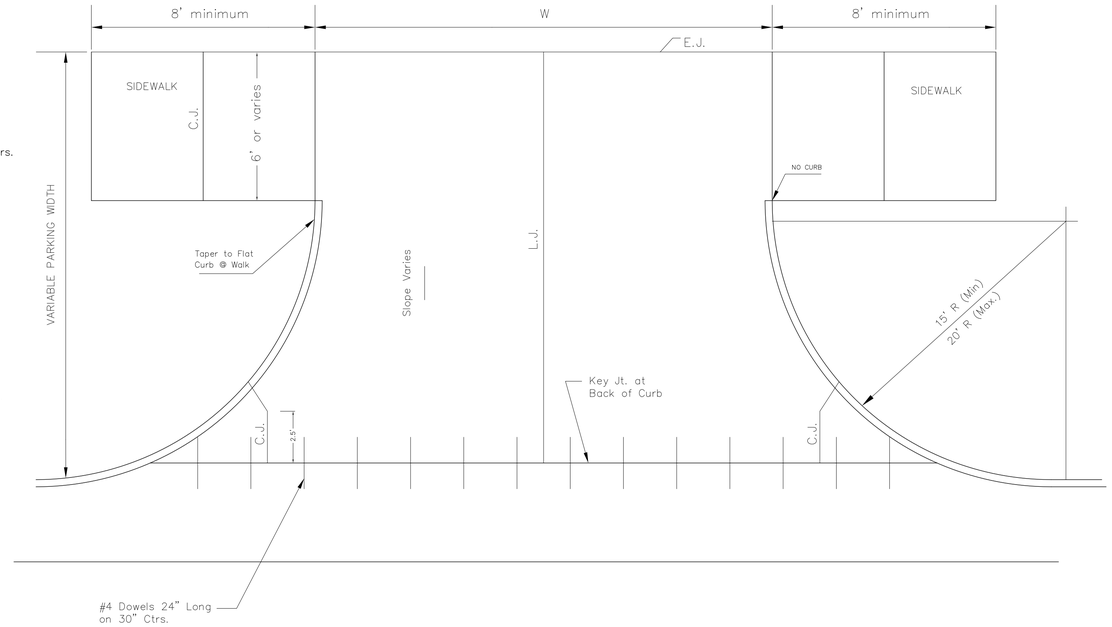

Use Ramp-Type Approach when distance between fc. wk. & bk. cb. is 8'-0" or less. Where parking width is 8'-0" or less ramp shall be constructed full width.

ALLEY APPROACH DETAIL

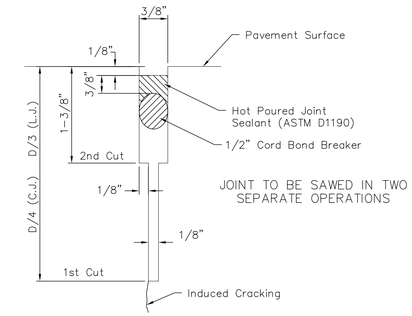

SAW JOINT DETAIL

(Detail A)

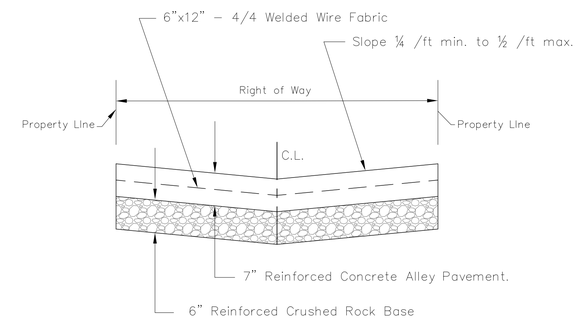

TYPICAL PAVEMENT SECTION

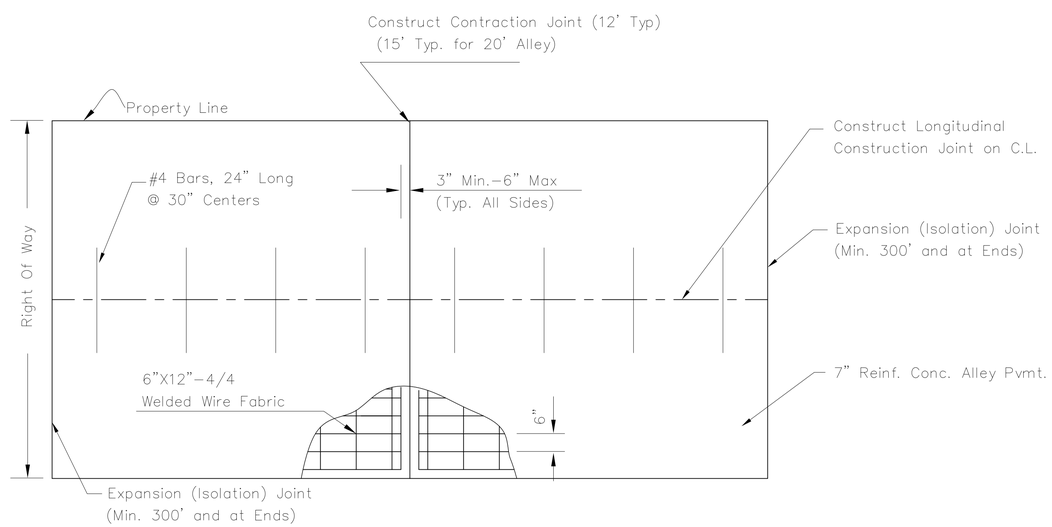

SLAB REINFORCEMENT DETAIL

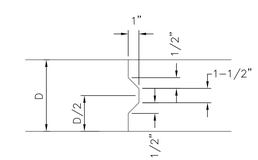

KEYWAY DETAIL

REVISED: NOVEMBER 2015

CITY OF WICHITA

PUBLIC WORKS & UTILITIES
ENGINEERING DIVISION

REINFORCED CONRETE
ALLEY PAVING
DETAIL

CITY ENGINEER
GARY JANZEN, P.E.

PROJECT NUMBER	OCA NUMBER	DATE

CITY ENGINEER'S OFFICE
CITY HALL - SEVENTH FLOOR
455 NORTH MAIN STREET
WICHITA, KANSAS 67202-1620
(316) 268-4501

SHEET

PV-108