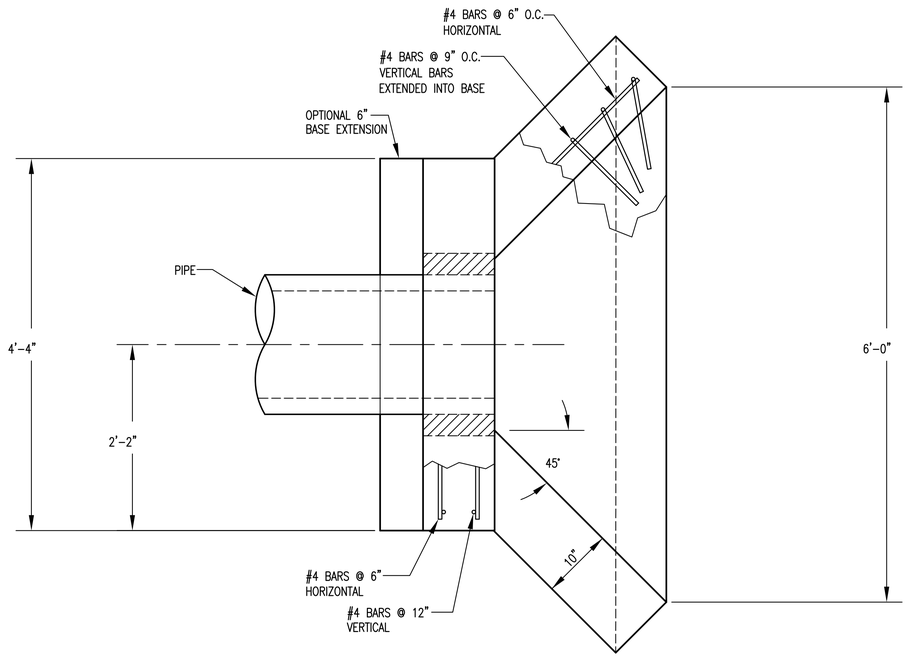

PLAN VIEW

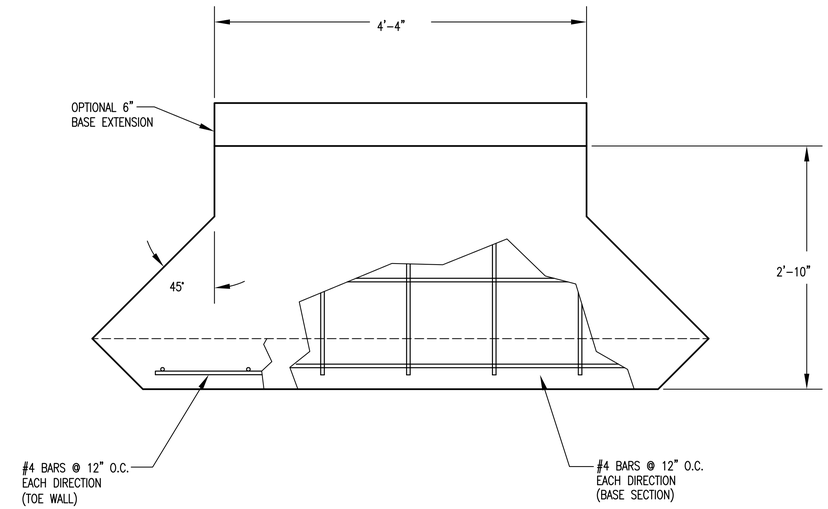

PLAN VIEW
BASE

PIPE Ø	A	B	BLOCKOUT Ø
15"	1'-5 1/2"	7 1/2"	2'-1 1/2"
18"	1'-7"	9"	2'-5"
24'	1'-10"	1'-0"	3'-0"

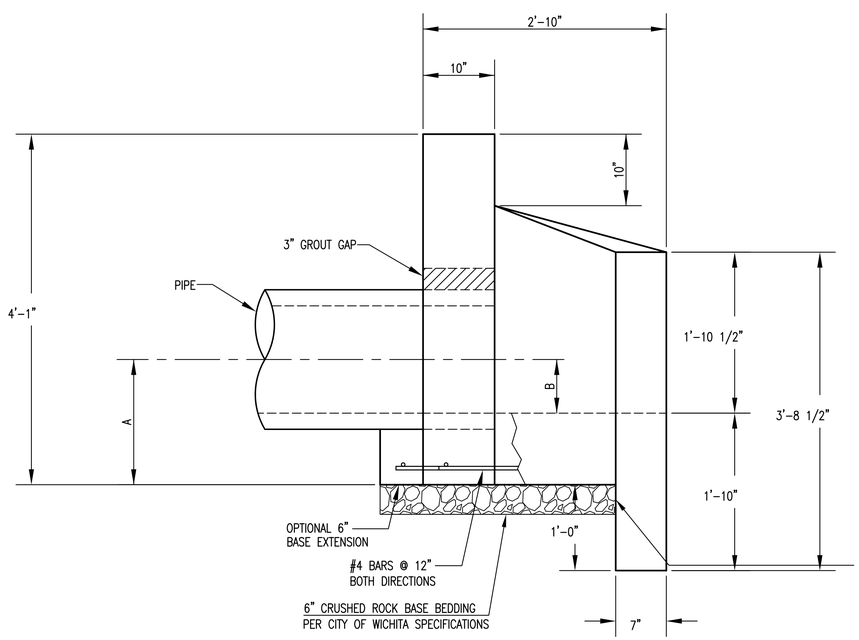

ELEVATION

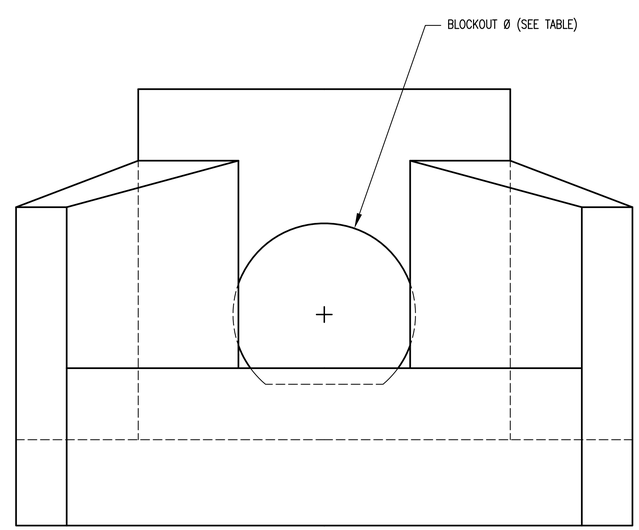

FRONT VIEW

HEADWALLS, AS SHOWN, WILL NOT SUPPORT FLAP GATE.

CITY OF WICHITA
PUBLIC WORKS & UTILITIES
ENGINEERING DIVISION

HEADWALL
DETAILS FOR
15", 18", AND 24" PIPE

CITY ENGINEER
GARY JANZEN, P.E.

PROJECT NUMBER	OCA NUMBER	DATE
		11/2010

CITY ENGINEER'S OFFICE
CITY HALL - SEVENTH FLOOR
455 NORTH MAIN STREET
WICHITA, KANSAS 67202-1620
(316) 268-4501

SHEET

SW-402